Labs for EGN 3375 Electromechanical Energy Systems at University of South Florida

Zhixin Miao, Lingling Fan, Minyue Ma, Yin Li, Zhengyu Wang
Department of Electrical Engineering
University of South Florida
Tampa, Florida 33620
{zmiao, linglingfan}@usf.edu, {minyuema, yin, zhengyuwang}@mail.usf.edu

***Abstract*—This paper describes the labs designed for University of South Florida (USF)'s undergraduate course EGN 3375 Electromechanical Energy Systems. We employ PSCAD, OPAL-RT's RT-Lab real-time digital simulator, and National Instruments' (NI's) control toolkit: general purpose inverter controller (GPIC), single board RIO (sbRIO) with LabVIEW as GUI. The labs offer students in-depth understanding of Faraday's Law, the key principle for transformers and rotating machines. The labs also expose students to the state-of-the-art simulation and control tools and offer students hands-on experiences.**

***Index Terms*—PSCAD, RT-LAB, LabVIEW, Real-Time Simulation, Electrical Machines**

I. Introduction

Traditionally, Electric Machinery is the fundamental course for power engineering undergraduate students. The need of this course is obvious that the large-scale synchronous generators at 100 MW or more are the major workhorse for the power industry and the wind energy industry employs both induction machines and synchronous machines to produce power. Moreover, the booming electric vehicle industry makes this course even more appealing to students.

The classic textbook used for teaching is Fitzgerald & Kingsley's Electric Machinery [1], currently at its 7th version. The book is a classic and offers in-depth knowledge on machines. Even though, there is still a need to design labs for better teaching and suiting the current day industry.

The labs initiated in 2010 when USF joined University of Minnesota's DOE-sponsored nationwide consortium to revitalize electric power engineering education by laboratories. Through the years, we evolved the labs and integrated RT-Lab and NI's control toolkits. There are two reasons for carefully designed labs. First, labs lead to in-depth learning. Machines are difficult subjects. To link the abstract concepts of rotating magnetic fields and Faraday' Law to the physical world, labs are necessary. Second, labs expose students to the state-of-the-art simulation and control tools, and further new subjects. If we show a student how to control an induction motor's speed through a testbed, then even a student has not taken power electronics and control systems, he/she will have a good picture on how things work and what to pursue as the next step.

The outcomes of the carefully designed curriculum (EGN 3375 and the accompanies labs) make the power program at USF attract more students. Offering training on RT-Lab and NI's control toolkit also makes our graduates favorites of the industry.

In this paper, the philosophy of the lab design and the details of the labs are presented. The sections followed will present Lab 1: PSCAD labs for transformer B-H curve plotting, Lab 2: PSCAD and RT-Lab modeling of 3-phase transformers, Lab 3: GPIC and sbRIO enabled synchronous machine Faraday's Law check and Lab 4: GPIC and sbRIO enabled induction machine volt/Hz control and torque-speed curve plotting.

The dominant law in this course is Faraday's Law and the two applications are transformers and electric machines. In transformers, varying magnetic field induces electromotive force (EMF). In rotating machines, rotating magnetic field is formed in air gap, which causes varying flux linkages in windings and further EMF. In lab designs, our emphasis is Faraday's Law. Faraday's Law is expressed as

$$v = \frac{d\lambda}{dt}.$$

where v is the induced EMF in a circuit and λ is the flux linkage linked to the circuit.

When we deal with a single frequency AC system, we will use phasors to express the Faraday's Law:

$$\overline{V} = j\omega\overline{\lambda}, \tag{1}$$

where ω is the frequency of the flux linkage. Hence it is obvious that volt/Hz should keep constant for a constant flux.

With the first two labs focusing on software training, magnetic circuits, and three-phase system connections, the next two labs focus on hardware setup and control implementation. In both labs, GPIC, sbRIO with LabVIEW as GUI are employed together with DC motor and AC machines. Lab 3 examines Faraday's Law explicitly through observing the relationship of speed of a synchronous generator and the induced EMF magnitude. In Lab 4, Faraday's Law is examined through volt/Hz control of an induction machine. Lab 4 exposes students to power electronic converter control and motor drives.

II. Lab 1: B-H curve plotting using PSCAD

This lab helps students understand the electromagnetic circuits. The objective is to plot B-H curves. However, flux density B and field strength H cannot be directly measured.

In order to make plots, students have to find the corresponding measurements and develop a good understanding of their relationship.

A. Lab setup

A circuit with a transformer needs to be setup. The circuit is shown in Fig. 1. To compare the effect of the resistance at the secondary side, two circuits with different secondary side resistance R_2 are built in PSCAD. Note that this is an AC circuit and the measurements are all instantaneous values. The upper circuit has a small resistance (1Ω) while the lower one has a large resistance (1 MΩ).

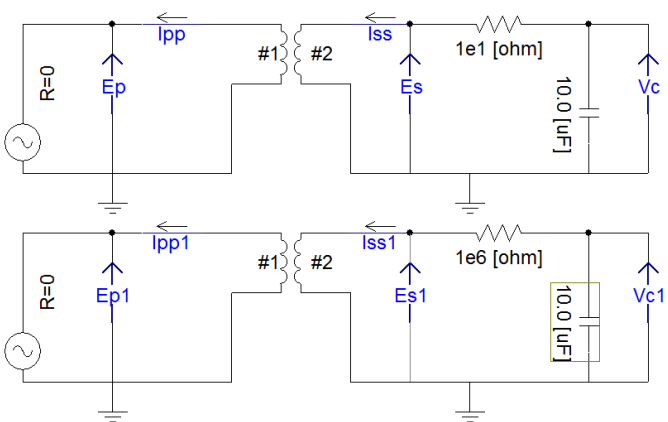

Fig. 1: Upper: the circuit with a small resistance; Lower: the circuit with a large resistance.

B-H curve is plotted using the primary side current measurement I_{pp} as the x-axis and the secondary side capacitor voltage V_c as the y-axis. Based on Ampere's Law, we know that the total magnetomotive force (MMF) is proportional to currents and the magnetic field strength is related to the current.

The underlying assumptions are:

- The primary side current can be treated as the magnetizing current. The magnetizing current sets up the magnetic field. That is, the secondary side current I_{ss}, after referring to the primary side, is insignificant. The secondary side is almost open-circuited. Apparently, the lower circuit is suitable for B-H curve plotting.
- The capacitor voltage is in phase and proportional to the flux been setup in the transformer.

In the following analysis, we will validate the aforementioned assumptions. We will use PSCAD transformer's internal variables, such as flux, to validate our points. Note that in real-world, voltage and current measurements are easy to obtain. The flux is for analysis only.

B. Analysis of the circuit

In the transformer, there are two windings so MMF can also be expressed by the sum of the ampere-turns of two windings.

$$\mathcal{F} = N_p I_{pp} + N_s I_{ss} \tag{2}$$

To eliminate the effect of I_{ss}, the secondary side is open-circuited by connecting a very large impedance in series. Then, I_{pp} is considered as the magnetizing current I_m.

$$\mathcal{F} = N_p I_{pp} = Hl, \quad H = \frac{N_p I_{pp}}{l} \tag{3}$$

With that, the first assumption is validated. Fig. 2 presents the PSCAD simulation results to show I_{pp} and I_m are the same if R is large. Also note that a transformer's magnetizing current is distorted due to non-ideal magnetic field characteristics, e.g., saturation and hyteresis.

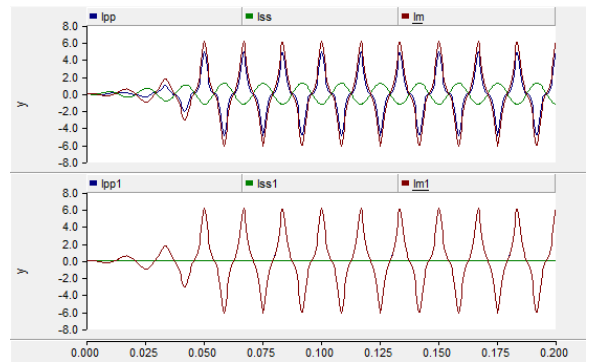

Fig. 2: Upper: I_{pp} is smaller than I_m when R is small; lower: I_{pp} is equal to I_m when R is large.

In the circuit, the selected R_2 is much larger than $\frac{1}{j\omega C}$, so $-\bar{I}_{ss}$ and $\bar{E}_s$ are in phase.

$$\bar{I}_{ss} = -\frac{\bar{E}_s}{R + 1/(j\omega C)}, \Rightarrow, \bar{I}_{ss} \simeq -\frac{\bar{E}_s}{R} \tag{4}$$

The voltage across the capacitor $\bar{V}_c$ and the current $\bar{I}_{ss}$ have the following relationship:

$$\bar{V}_c = -\frac{1}{j\omega C}\bar{I}_{ss} = -j\frac{\bar{E}_s}{\omega RC} \tag{5}$$

Note that based on Faraday's Law presented in (1), $\bar{E}_s$ and the flux setup in the transformer has the following relationship:

$$\bar{E}_s = j\omega N_s \bar{\phi} \tag{6}$$

where $\bar{\phi}$ is the phasor of the mutual flux in the transformer magnetic field.

Substituting (6) into (5), we find that $\bar{V}_c$ is in phase with $\bar{\phi}$:

$$\bar{V}_c = \frac{N_s}{RC}\bar{\phi}. \tag{7}$$

With that, the second assumption is validated. Hence, V_c is proportional to B and we can represent B by V_c in B-H curve shown in Fig. 4. Fig. 3 validates this assumption. When R is large, V_c and ϕ are in phase.

III. Lab2: Three-phase transformer simulation in PSCAD and RT-Lab

In Lab 2, a three-phase transformer is built and analyzed. It can help students understand three-phase circuits and the specific characteristics in three-phase transformers. Students are introduced to RT-Lab in Lab 2 after getting familiar with PSCAD.

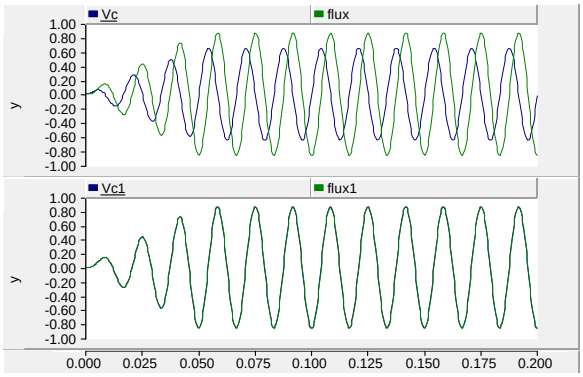

Fig. 3: Upper: V_c and ϕ are not in phase when R is small; lower: V_c and ϕ are in phase when R is large.

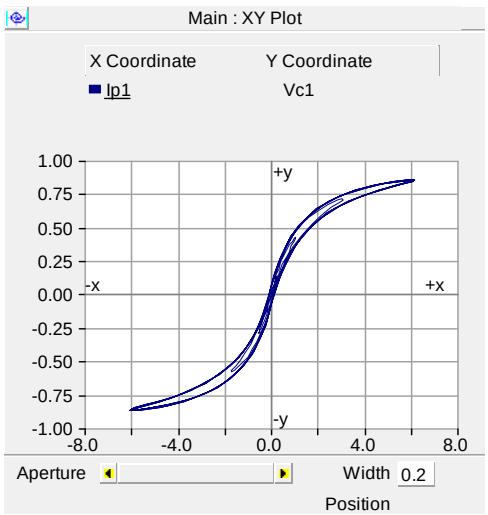

Fig. 4: B-H curve is generated by plotting V_c versus I_{pp}.

A. PSCAD Lab setup

The three-phase transformer consists of three single-phase transformers. They are connected in Y-Y connection shown in Fig. 5. The parameters of the single-phase transformer is listed in Table I.

TABLE I: Parameters of the single-transformer

Power level	50 kVA
Turns Ratio	2400:240 V
Frequency	60 Hz
$R_p + jX_p$	$0.72 + j0.92\Omega$
$R_s + jX_s$	$7 + j9m\Omega$
$R_c + jX_m$	$6.32 + j43.7\Omega$

The relation between the line-to-line voltage and the line-to-neutral voltage is demonstrated by the plot shown in Fig. 6. One voltage meter is placed between two phases and another is placed between the line and the neutral point. Based on Fig. 6, it is found that $E_{p,an}$ is lagging $E_{p,ab}$ by 30 degree. Students can relate the relationship in time-domain to that in phasor: $\bar{E}_{p,ab} = \sqrt{3}\bar{E}_{p,an}\angle 30^0$.

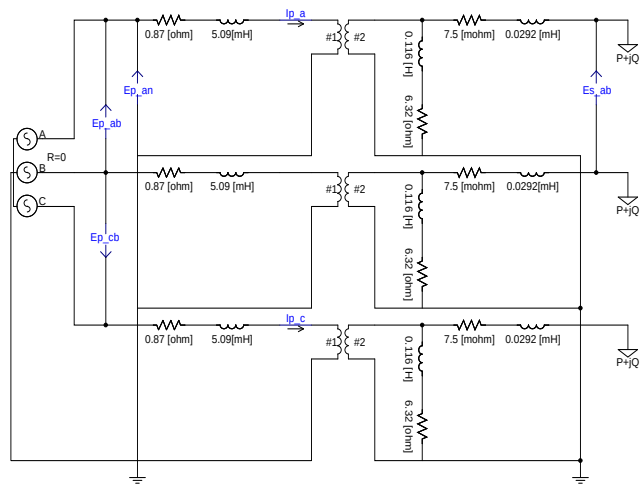

Fig. 5: Three single-phase transformer are connected in Y-Y connection.

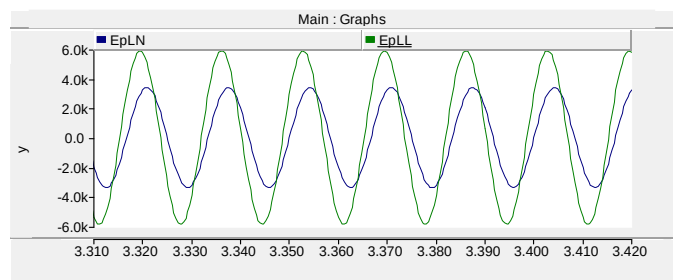

Fig. 6: Two voltage measurements are plotted.

B. RT-LAB Simulation Lab

RT-LAB provides real-time simulation based on MATLAB/Simulink models and digital/analog I/O interface. Measurements from MATLAB/Simulink models can be output as analog signals to an oscilloscope.

To run simulation in RT-LAB, a Simulink model is required to be built in advance with SimPowerSystem Toolbox components. In the experiment, a three-phase circuit in $Y - \Delta$-connection is modeled.

To generate necessary measurements of the circuit, meters (scopes) are placed in the circuit in Simulink. Next, the Simulink model is converted to RT-LAB model format and imported to RT-LAB software. After compiling and loading model to RT-LAB Simulator, real-time simulation is executable. This experiment setup is shown in Fig. 8.

The source side (Y-connection) phase voltage and line-line voltage, and the load side (Δ-connection) line current and phase current are measured and displayed in an oscilloscope. The measurements are shown in Fig. 9.

From measurement comparison shown in Fig. 9, the results verify the relationships usually presented in phasor domain: in Y-connection, the line to line voltage is $\sqrt{3}$ times of the line to neutral voltage; in Δ-connection, the line current is $\sqrt{3}$ times of the leg current of the Δ connection.

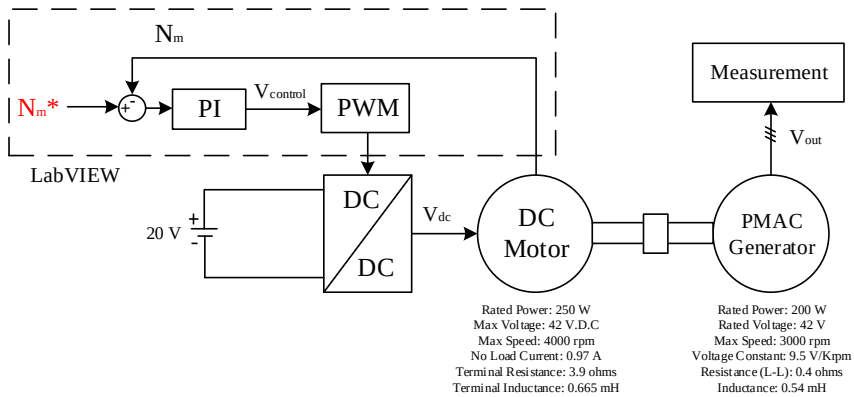

Fig. 7: Lab 3 setup block diagram. Speed control is applied.

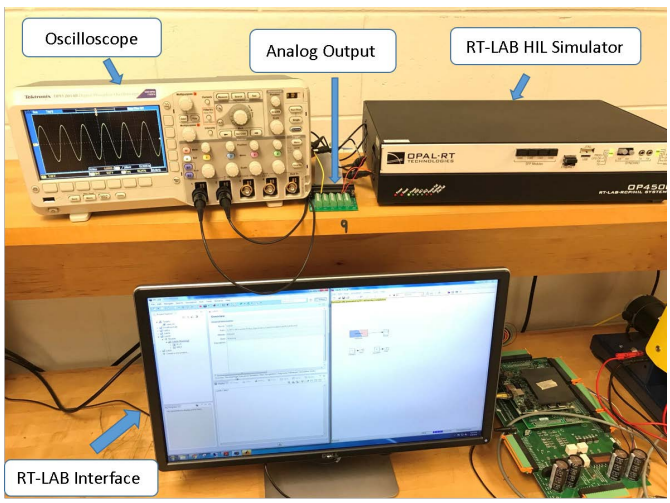

Fig. 8: Laboratory experiment setup for real-time simulation of three-phase circuit.

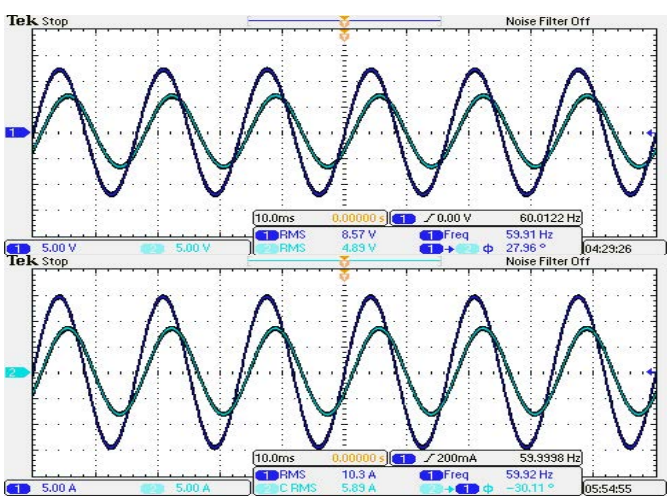

Fig. 9: Measurement comparisons of balanced three-phase circuit in $Y\Delta$-connection.

IV. Lab 3: PMAC Generator Open-Circuit Voltage Relationship with Speed

In Lab 3, a DC motor is powered to run a permanent magnet AC (PMAC) synchronous generator. The mechanical speeds of both machines are the same, notated as N_m in revolutions per minute (rpm), due to the physical connection between their rotors. The DC motor is connected to a DC/DCconverter to have an adjustable input DC voltage. Closed-loop speed control is applied on a DC/DCconverter to adjust the applied DC voltage in the field winding, in turn to adjust the flux and the mechanical torque. The synchronous generator's open-circuit output voltage is measured via an oscilloscope. Fig. 7 is the block diagram of lab setup. The experiment setup photo is shown in the Fig. 10.

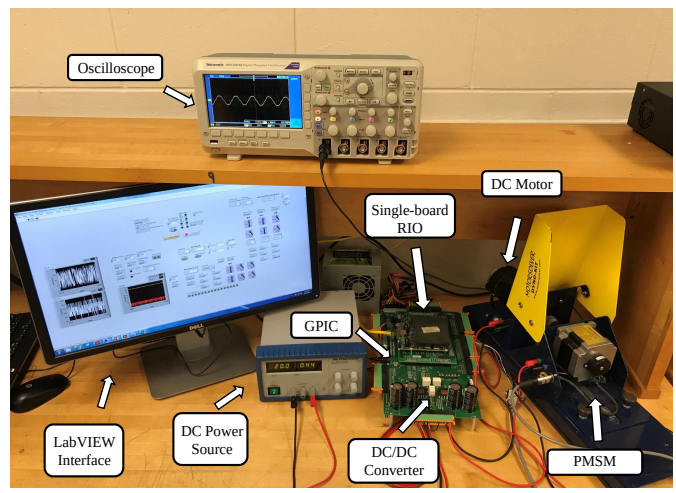

Fig. 10: Physical lab photo for Lab 3.

Students will vary the reference speed of the DC motor and observe the PMAC's output voltage magnitude. This experiment is to understand rotating magnetic field formation and Faraday's Law. A rotating magnetic field will be generated in the airgap with a rotating speed same as the mechanical speed. This rotating magnetic field will generate a flux linkage at a frequency of $\frac{\text{Poles}}{2}\frac{N_m}{60}$ in a static circuit. Based on Faraday's Law, the induced voltage is proportional to N_m. In short, for sinusoidally distributed airgap flux with a constant magnitude due to permanent magnet, the open-circuit voltage induced is proportional to the rotating speed of the rotor.

The DC/DCconverter control is realized through NI's sbRIO

with LabVIEW as the GUI interface.

From the motor measurement in LabVIEW, mechanical speed N_m in revolutions per minute (rpm) is collected. The relationship between the open-circuit voltage and the mechanical speed relationship can be simplified as $E_a = K_e N_m$. Based on given machine speed references, corresponding line-line output voltage measurements of PMAC are collected as shown in the Fig. 11.

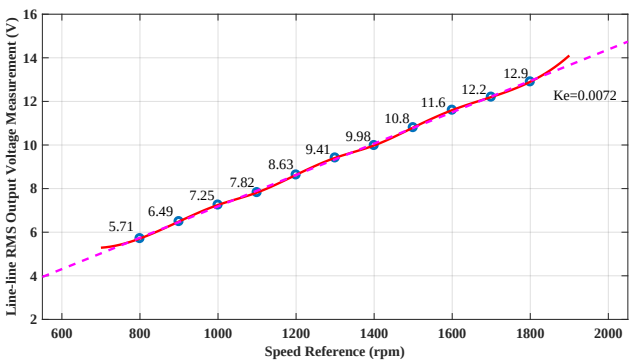

Fig. 11: Measurement output line-line RMS voltage vs. speed reference plot.

V. Lab 4: Induction Motor Volt/Hz Control and Torque-Speed Curve

The objective of Lab 4 is to plot torque-speed curves for various stator frequencies. In undergraduate classes, usually single torque-speed or torque/slip curve appears to show torque and speed relationship under certain frequency and given stator voltage. On the other hand, in AC motor drives [2], multiple torque-speed curves corresponding to different stator frequencies are usually presented.

The various stator frequency is realized through dc/ac converter. Lab 3 already introduces DC/DCconverter to students. Lab 4 further introduces dc/ac converter to students. Lab 4 further introduces volt/Hz control to students. To keep a constant flux, the ratio of voltage and frequency should keep constant based on Faraday's Law.

In the lab setup, the induction motor's stator will be connected through a dc/ac converter to a DC source. Its rotor is coupled with a DC motor's rotor. We change DC motor's DC voltage to change DC motor's torque. This in turn changes the AC motor's load torque. The DC motor's input voltage is adjusted through a DC/DCconverter using open-loop control.

In Lab 4, students will first decide the stator frequency. Under this frequency, they then change the DC voltage of the DC motor. They measure the induction motor's speed and DC motor voltage. The armature current of the DC motor will be computed and the armature current-speed curves will be plotted. For a DC motor with permanent magnet, its armature current is proportionally related to the torque with a constant coefficient. This torque can also be viewed as the torque of the induction machine. Thus, the plot of DC motor armature current versus speed is equivalent to the torque-speed curves of an induction motor.

The experiment setup block diagram is shown in Fig.12 and the photo of the testbed is presented in Fig. 13.

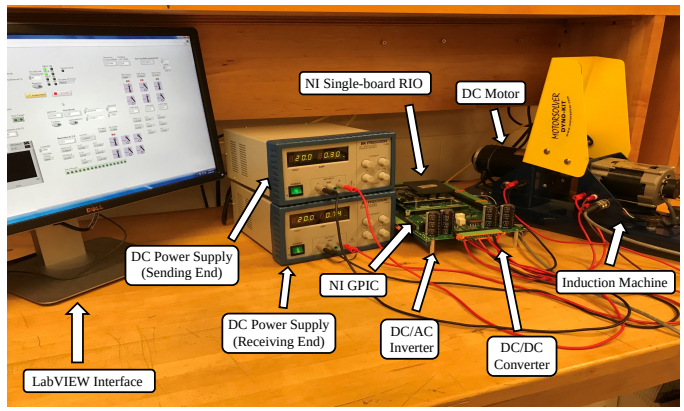

Fig. 13: Physical equipment for Lab 4.

Fig.14 presents three sets of data measured when different frequencies are selected for the induction machine's stator voltage. Voltages and currents of the two voltage sources are directly given. Voltage at the DC motor is measured using a meter. V_{ref} and Speed of the induction machine are directly obtained from Labview. The resistance of the lines connecting the DC/DCconverter and the DC motor is approximately $1.56\ \Omega$. E_{dc} can be found based on DC/DCconverter's modulation: $E_{dc} = \frac{V_s}{2}(1 + V_{\text{ref}})$. I_{dc} is computed based on power conservation assuming switching loss is ignored for the DC/DCconverter: $I_{dc} = \frac{V_s I_s}{E_{dc}}$. The default direction is into the DC motor in Fig. 14. In the torque-speed plots, we treat the induction machine as a motor and the dc machine as a generator. Hence the direction of positive current is from the DC motor to the DC source. This direction is used for the armature current-speed plots in Fig. 15.

Note that when slip is 0 or speed is nominal for the 4-pole machine, the DC current or torque is not 0. Rather, the DC/DCconverter has to supply power to the DC motor. This is due to the mechanical friction of the DC motor.

Fig. 15 shows that the three lines have almost similar slopes, or the ratio of torque and slip frequency is approximately constant when flux is constant. This relationship can be further explained using the torque expression learned from EGN 3375. The torque is first expressed in terms of the airgap power and the synchronous speed. Then the airgap power is expressed in terms of the rotor current. Assuming slip is very small and the rotor circuit is almost resistive, the rotor current will be in phase with the EMF induced (see Fig. 16):

$$\bar{I}_r = \frac{\bar{E}_m}{R_r/s} = js\omega_e \frac{\bar{\lambda}_m}{R_r},$$

where λ_m is the flux linkage linked to the rotor winding due to the total flux in the airgap. Note the rotating magnetic field's rotating speed is $\frac{2}{\text{Poles}}\omega_e$. Hence the flux linkage is sinusoidal and has a frequency of ω_e.

$$T_e = \left(\frac{\text{Poles}}{2}\right)\frac{P_{ag}}{\omega_e} = \left(\frac{\text{Poles}}{2\omega_e}\right) 3I_r^2 \frac{R_r}{s} = 3\left(\frac{\text{Poles}}{2}\right)\frac{\lambda_m^2}{R_r}\omega_{sl}$$

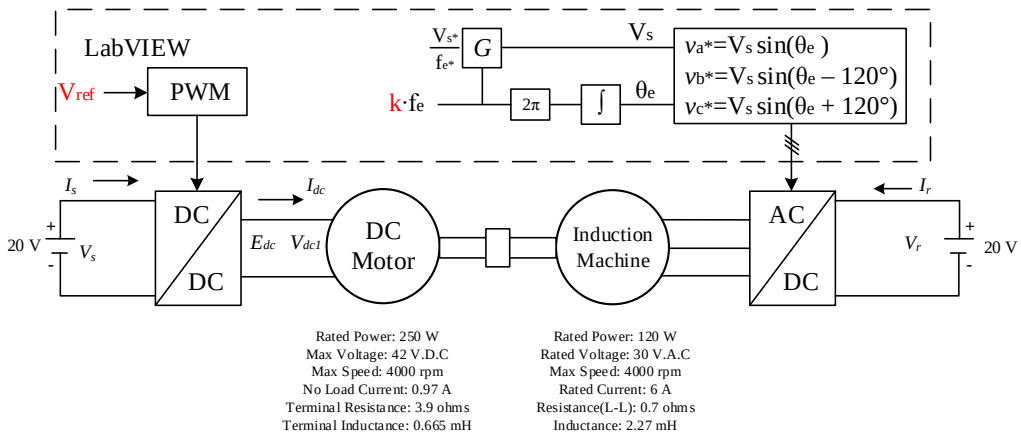

Fig. 12: Setup block diagram of Lab 4. By changing the value of k, the stator frequency is changed. By changing the value of V_{ref}, voltage applied on DC motor is changed, and the torque is changed.

30 Hz

Vref	Vs (V)	Is (A)	Vdc1 (V)	Nm (RPM)	Vr (V)	Ir (A)	Edc (V)	Idc (A)
-0.5	26.7	-0.06	7.36	829	20	1.06	6.675	-0.24
-0.4	23	-0.05	7.47	834	20	1.04	6.9	-0.16667
-0.3	20.3	-0.05	7.57	839	20	1.02	7.105	-0.14286
-0.2	20	0.03	8.05	857	20	0.93	8	0.075
-0.1	20	0.15	8.57	877	20	0.82	9	0.333333
0	20	0.3	9.07	896	20	0.75	10	0.6
0.1	20	0.56	9.62	918	20	0.6	11	1.018182
0.2	20	1.02	10.32	950	20	0.36	13	1.569231
0.3	20	1.64	11.11	985	20	0.17	14.5	2.262069

36 Hz

Vref	Vs (V)	Is (A)	Vdc1 (V)	Nm (RPM)	Vr (V)	Ir (A)	Edc (V)	Idc(A)
-0.5	33.2	-0.06	8.98	1005	20	1.27	8.3	-0.24
-0.4	28.4	-0.06	9.1	1015	20	1.24	8.52	-0.2
-0.3	25	-0.05	9.2	1017	20	1.2	8.75	-0.14286
-0.2	23	-0.05	9.32	1021	20	1.18	9.2	-0.125
-0.1	20.1	-0.05	9.39	1024	20	1.16	9.045	-0.11111
-0.05	20	0	9.62	1033	20	1.09	9.5	0
0	20	0.06	9.87	1043	20	1.03	10	0.12
0.05	20	0.13	10.12	1051	20	0.97	10.5	0.247619
0.1	20	0.2	10.37	1060	20	0.9	11	0.363636
0.2	20	0.39	10.84	1079	20	0.76	12	0.65
0.3	20	0.74	11.45	1103	20	0.56	13	1.138462

24 Hz

Vref	Vs (V)	Is (A)	Vdc1 (V)	Nm (RPM)	Vr (V)	Ir (A)	Edc (V)	Idc(A)
-0.5	20	-0.05	5.63	648	20	0.86	5.2	-0.19231
-0.4	20	0	6.19	672	20	0.79	6	0
-0.3	20	0.08	6.71	693	20	0.73	7	0.228571
-0.2	20	0.2	7.19	714	20	0.66	8	0.5
-0.15	20	0.29	7.36	722	20	0.61	8.5	0.682353
-0.1	20	0.38	7.69	730	20	0.58	9	0.844444
-0.05	20	0.55	8.04	749	20	0.51	9.5	1.157895
0	20	0.75	8.43	768	20	0.45	10.5	1.428571
0.05	20	0.98	8.82	781	20	0.38	11.5	1.704348
0.1	20	1.26	9.18	800	20	0.3	12	2.1
0.2	20	1.91	9.93	832	20	0.19	14	2.728571
0.3	20	2.75	10.64	864	20	0.02	16	3.4375

Fig. 14: Lab 4 measurements and calculation.

where P_{ag} is the airgap power, ω_e is the stator frequency in rad/s, ω_{sl} is the slip frequency ($\omega_{sl} = s\omega_e$), and λ_m is the RMS value of the flux linkage. The above analysis shows that when slip is very small and the flux is constant, torque is proportional to the slip frequency. This is indeed the foundation of adjustable frequency motor speed control in motor drive. With a constant load torque, if we aim to obtain a different speed of the motor, we change the stator frequency through a dc/ac converter.

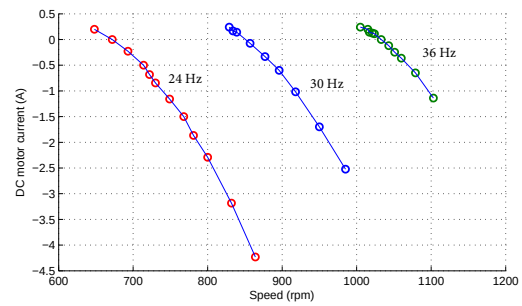

Fig. 15: Equivalent torque-speed curves. Torque is substituted by armature current of the DC motor.

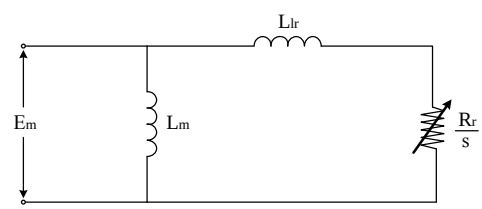

Fig. 16: Induction machine rotor side circuit.

VI. Conclusion

Four labs were designed for an undergraduate course on Electric Machinery. The labs not only offer a hands-on experience to students to better understand the concepts taught in the class (e.g., Faraday's Law, rotating magnetic field), but also employ state-of-the-art simulation and power electronic control toolkits and expose students to the tools and various applications.

References

[1] A. E. Fitzgerald, *Electric Machinery (Seventh Edition)*. McGraw-Hill Higher Education, 2013, vol. 706.

[2] B. Bose, *Modern Power Electronics and AC Drives*, ser. Eastern Economy Edition. Prentice Hall PTR, 2002.